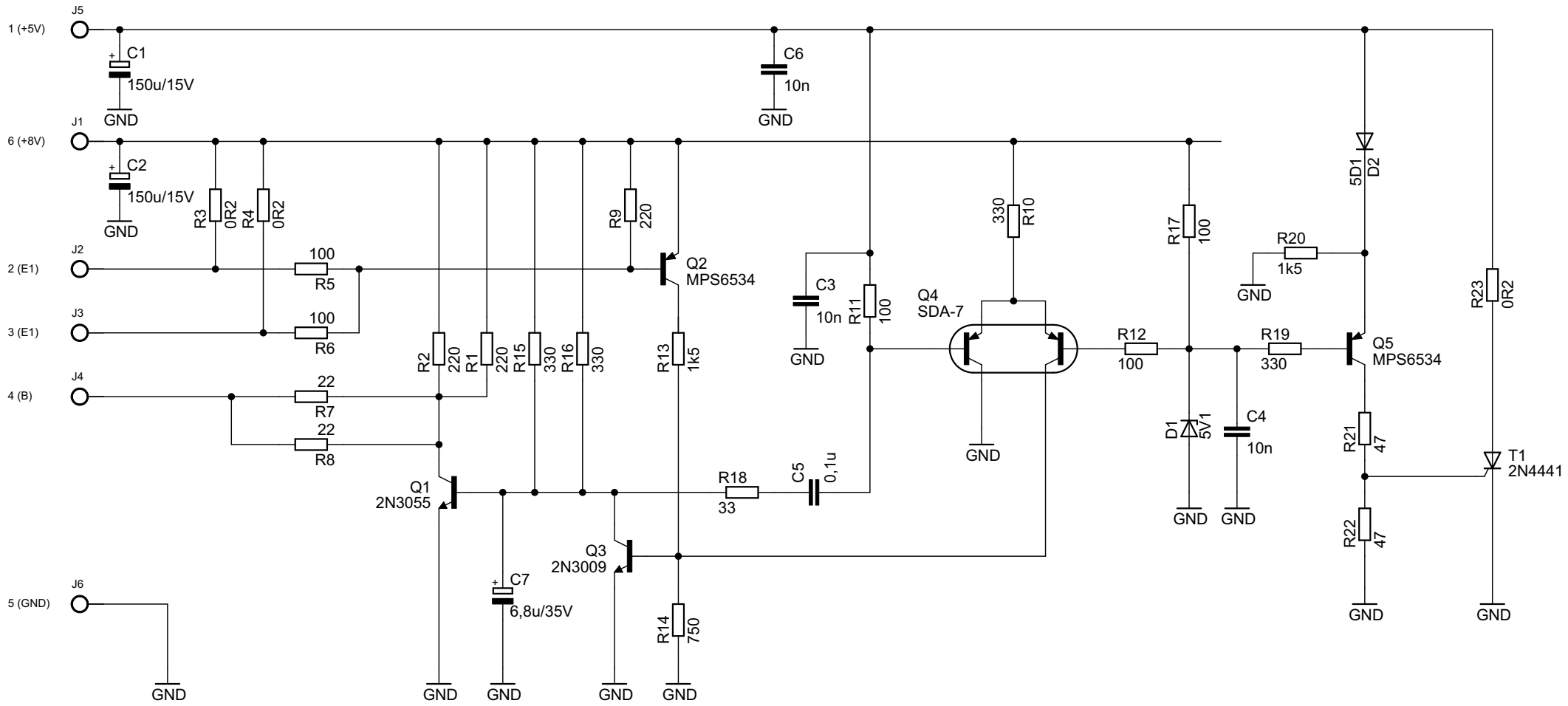

2016-01-08 23:25:48 f=1.13 \\smil\anders\eagle\projects\pdp-8_5V_regulator\5Vreg.sch (Sheet: 1/1)